xylem
Let's Solve Water

46SV31GM4F60

Created On: 2/12/26

46SV31GM4F60 | Configuration Summary

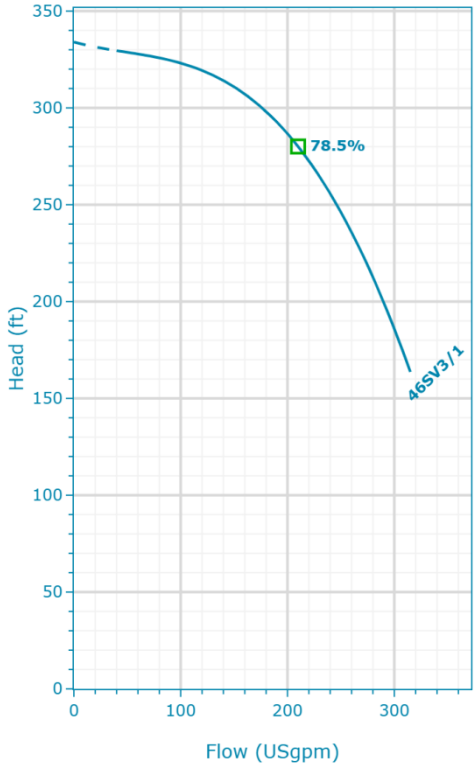

Performance according to ISO 9906:2012

PUMP

Installation	Pump Size
Complete Pump	33-92SV

MATERIALS

Pump Body Material	Impeller Material
Cast Iron (ASTM Class 35/40B)	Stainless Steel (AISI 316L)

SEAL

Type of Seal	Rotating Face
Mechanical Seals	Carbon

Stationary Face
Silicon Carbide Graphite Filled

Elastomers
Viton

Spring
316 SS

Metal Components
316 SS

STANDARD OPTIONS

Special Configuration	Additional Configuration
Please Select	Please Select

MOTOR

Frequency (Hz)	Power
60	25 hp
Poles	**Phase (~)**
2	3
Enclosure	**Voltage**
TEPE	208-230/460 V
Frame Size	**Sizing Method**
280TC	Max Shaft Power Across Curve

Service Factor
1.15

Allow Service Factor Usage
No

Upsize
No

FLANGE

Flange	Class Type
[G] = Round Flanges (AISI 304/Cast Iron)	Class 125 / 150

Project:	Created By:	Created On:	Last Update:
46SV31GM4F60	Bret Bernarding	2/12/26	-

46SV31GM4F60 | Product Details

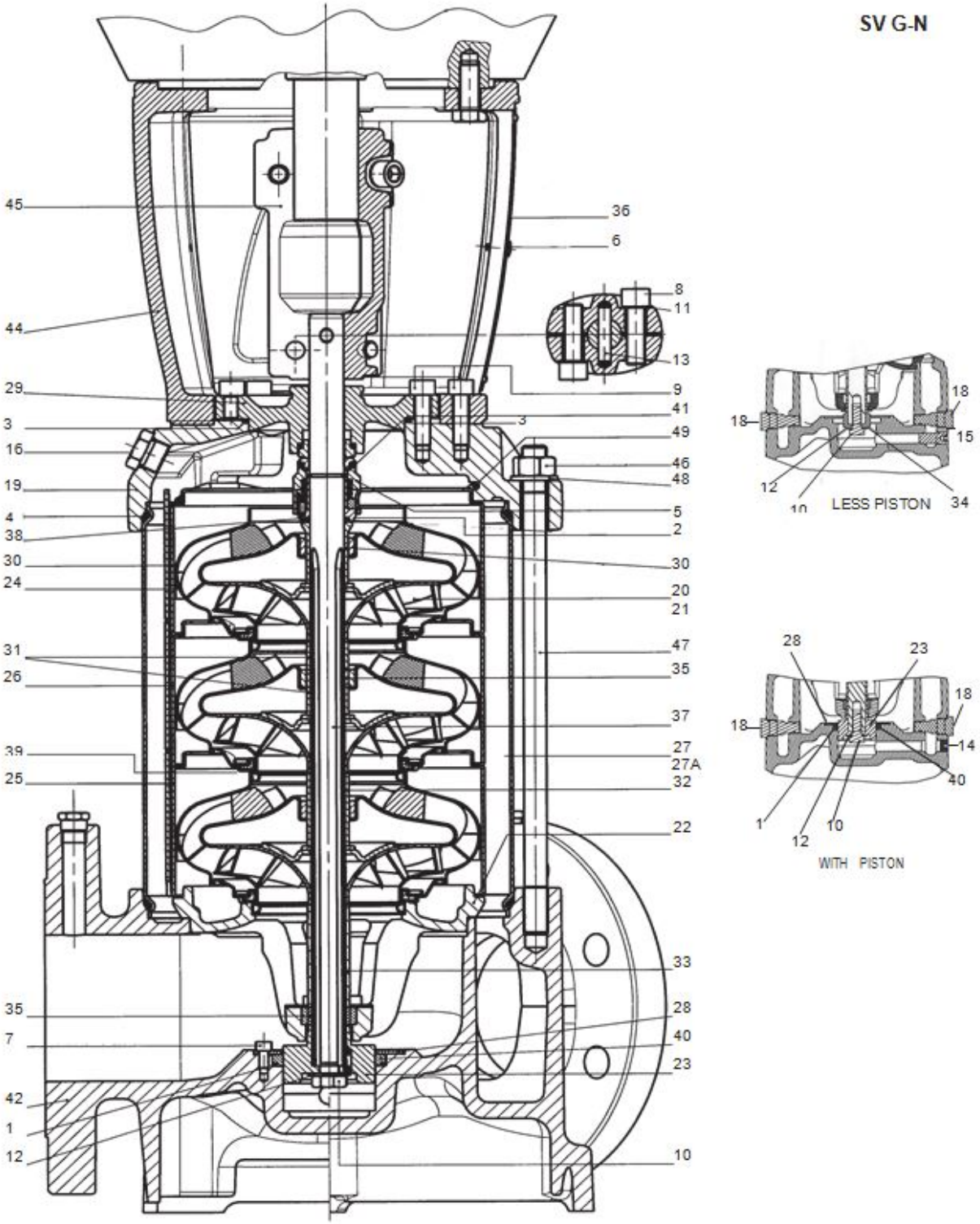

Construction Materials

O-Ring, Piston Seal (1)
Viton (std) EPDM (opt)

O-Ring, Mechanical Seal Sleeve (2)
See Mechanical Section

O-Ring, Seal housing (3)
Viton (std) EPDM (opt)

O-Ring, Sleeve (4)
Viton (std) EPDM (opt)

Mechanical Seal (5)
See Mechanical Section

Cartridge Seal (not shown) (5A)
See Seal Materials Chart for Complete Detail

Screw, Guard (6)
Stainless Steel / A193-304

Screw, Piston Holding Disc (7)
Stainless Steel / A193-316

Screw, Coupling (8)
Zinc Plated Steel / B363

Screw, MA and Seal Housing (9)
Zinc Plated Steel / B633

Screw, Impeller (10)
Stainless Steel / A193-316

Washer, Coupling (11)
Carbon Steel / A108

Washer, Impeller (12)
Stainless Steel / A193-316

Pin, Coupling (13)
Carbon Steel / A108

Plug, with Piston (14)
Stainless Steel / A193-316

Plug, without Piston (15)
Stainless Steel / A193-316

Project:	Created By:	Created On:	Last Update:
46SV31GM4F60	Bret Bernarding	2/12/26	-

Plug, Fill (16)
Stainless Steel/O-Ring / A193-316

Plug, Vent (not shown) (17)
Stainless Steel/O-Ring / A193-316

Plug, Drain (18)
Stainless Steel/O-Ring / A193-316

Pump Head (19)
Cast Iron / A48 Class 35

Impeller, Full Diameter (20)
Stainless Steel / A193-316L

Impeller, Reduced Diameter (21)
Stainless Steel / A193-316L

Lower Bearing Assembly (22)
SS/Cast Iron / A193-316L/A48 Class 35

Piston (23)
Duplex SS / A182-F51

Diffuser, Final (24)
Stainless Steel / A193-316L

Diffuser with Carbon Bushing (25)
Stainless Steel / A193-316L

Diffuser with Tungsten Bushing (26)
Stainless Steel / A193-316L

Outer Sleeve, 25 Bar (27)
Stainless Steel / A193-316L

Outer Sleeve, 40 Bar (27A)
Stainless Steel / A193-316L

Holding Disc, Piston Seal (28)
Stainless Steel / A193-316L

Seal Housing (29)
Cast Iron / A48 Class 35

Spacer, Impeller Final (30)
Stainless Steel / A193-316

Spacer, Shaft Bushing (31)
Stainless Steel / A193-316

Spacer, Impeller (32)
Stainless Steel / A193-316

Spacer, Impeller Lower (66-92SV) (33)
Stainless Steel / A193-316

Bushing, Non-Piston (34)
Stainless Steel / A193-316

Tungsten Carbide Bushing (35)
Tungsten Carbide

Coupling Guard (36)
Stainless Steel / A193-304

Shaft (37)
Duplex SS / A182-F51

Mechanical Seal Shaft Sleeve (38)
Stainless Steel / A193-316

Wear Ring, Impeller (39)
PPS Glass Filled

Piston Seal (40)
Impregnated Carbon

Stop Ring, Impeller (41)
Stainless Steel / A193-316

Pump Body (42)
Cast Iron / A48 Class 35

Motor Adapter Plate (not shown) (43)
Cast Iron / A48 Class 25

Motor Adapter (44)
Cast Iron / A48 Class 25

Coupling, Half (45)
Cast Iron / A48 Class 25

Nut, Tie-Rod (46)
Zinc Plated Steel / B633

Tie-Rod (47)
Zinc Plated Steel / B633

Washer, Tie-Rod (48)
Zinc Plated Steel / B633

Spring, Final Diffuser (49)
Stainless Steel / A193-316

Motor

Enclosure	Rated Power	Frame Size	FLA
TEPE	25 Hp	284TC	60-56/28
Speed	**Rated Voltage**	**Phase**	**SLA**
3500.0 rpm	208-230/460 V	3	70-63.2/31.6

46SV31GM4F60 | Hydraulic Data & Performance Curve

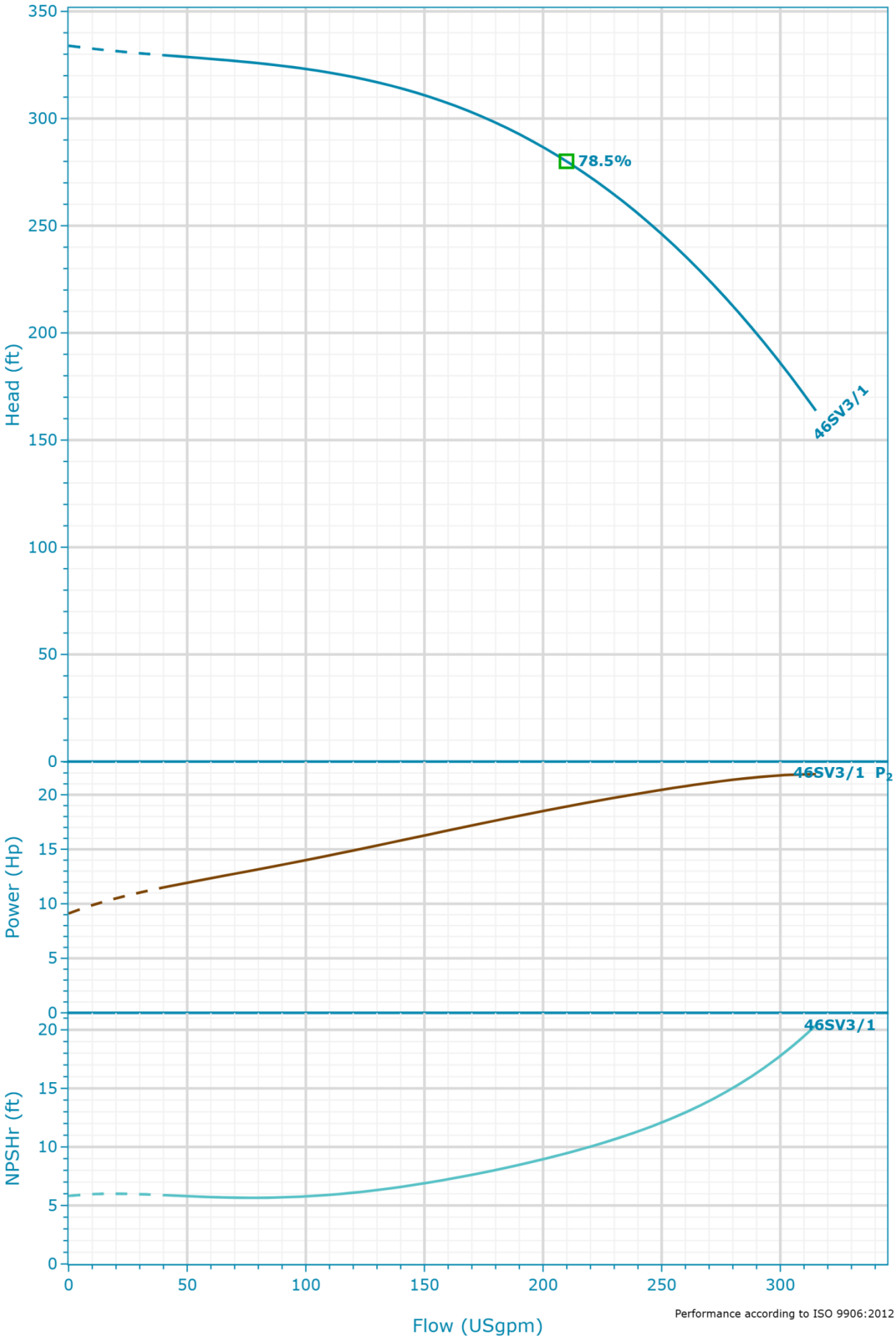

Performance according to ISO 9906:2012

Project:	Created By:	Created On:	Last Update:
46SV31GM4F60	Bret Bernarding	2/12/26	-

Selection

Series
e-SV

Name
46SV3/1 3500rpm

Stages
3

Frequency
60 Hz

Acceptance Grade
Manufacturer's Standard

System Type
Single Pump

Operating Pumps
1

Standby Pumps
No Standby Pump

Fluid and Operating Conditions

Fluid Type
Water

Fluid Temperature
39.2 °F

Specific Gravity
1

Density
62.43 lb/ft³

Dynamic Viscosity
1.57 cP

Fluid Vapor Pressure
0.12 psi

Atmospheric Pressure
14.7 psi

Elevation
0 ft

Ambient Temperature
68 °F

NPSH Available
33.68 ft

Submergence
0 ft

Design Curve

Rated Speed
3,500 RPM

Min Flow
40 USgpm

Max Flow
315 USgpm

H@QMin
329.56 ft

H@QMax
163.69 ft

BEP
78.49 %

BEP Flow
209.88 USgpm

BEP Head
280.07 ft

Max Operating Pressure
144.58 psi

Max P2
21.89 Hp

46SV31GM4F60 | Variable Speed Curve

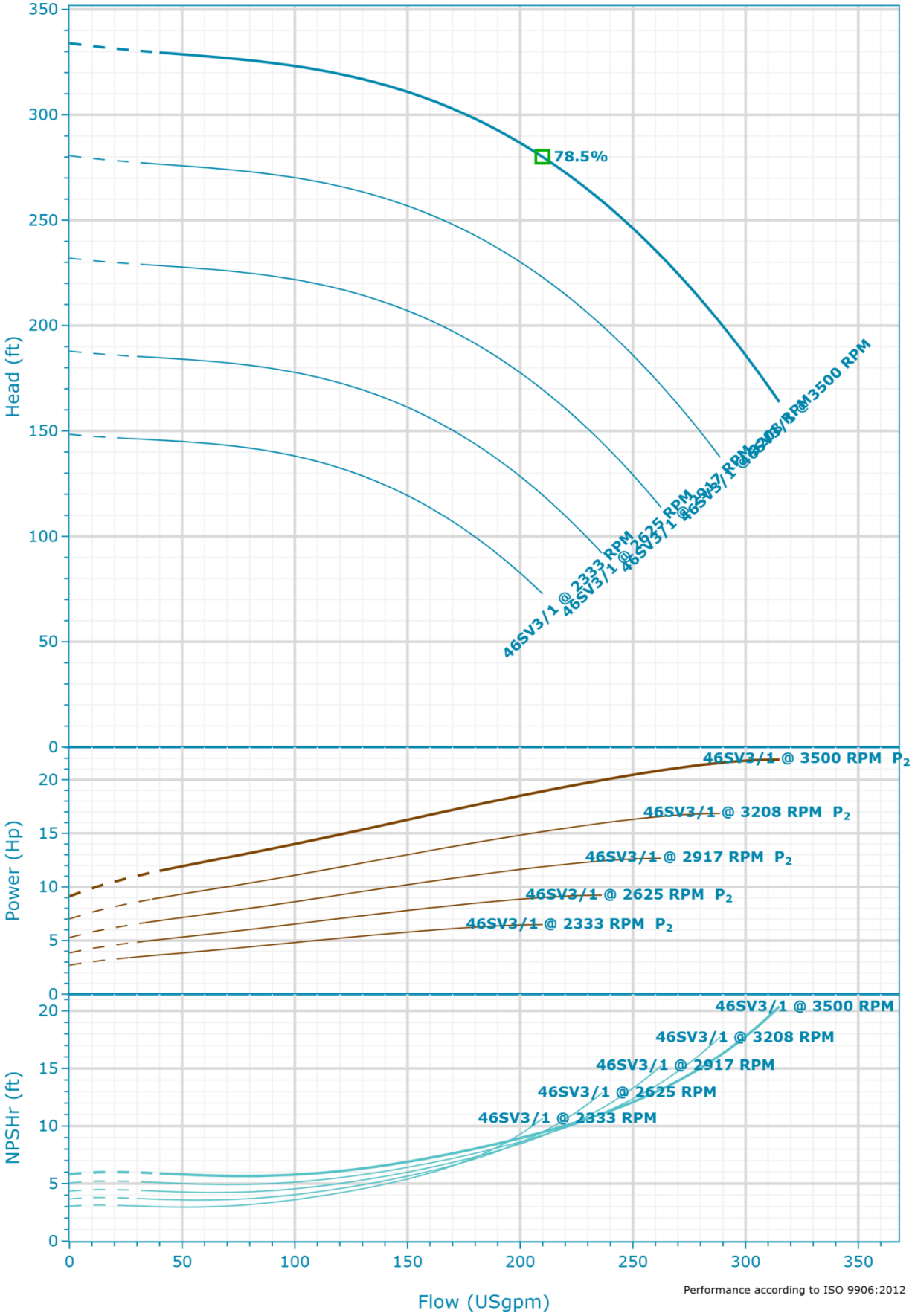

Performance according to ISO 9906:2012

Project:	Created By:	Created On:	Last Update:
46SV31GM4F60	Bret Bernarding	2/12/26	-

46SV31GM4F60 | Variable Speed Analysis

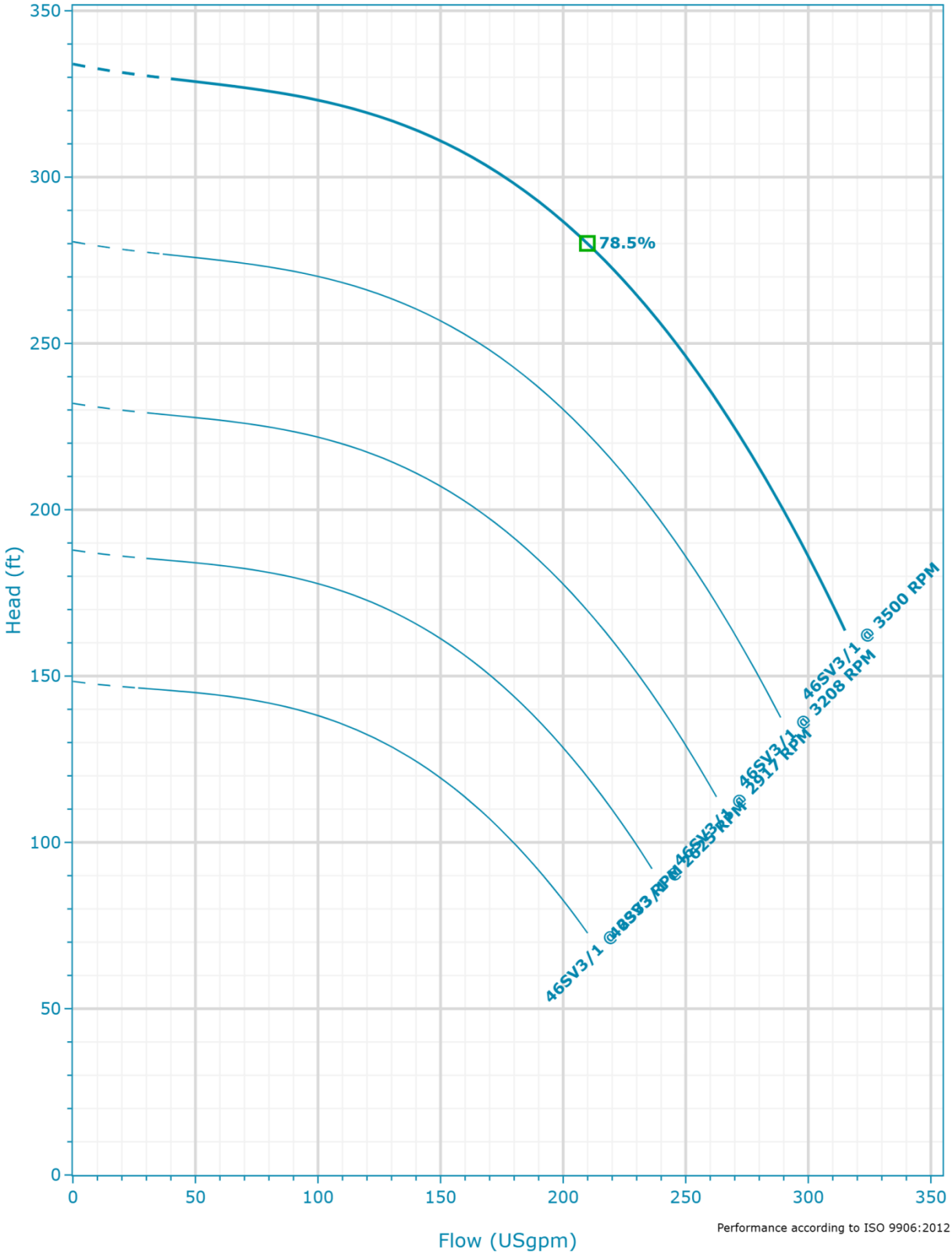

Project:	Created By:	Created On:	Last Update:
46SV31GM4F60	Bret Bernarding	2/12/26	-

46SV31GM4F60 | Dimensional Data & Drawing

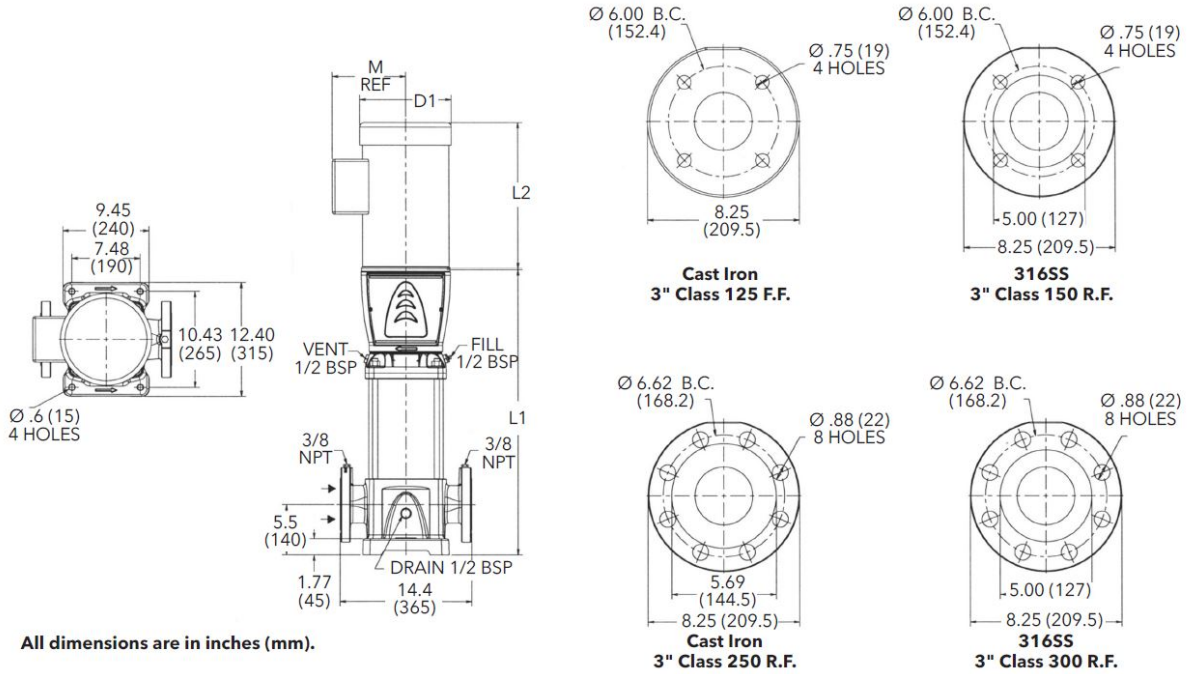

Drawing is preliminary and is subject to change.

Dimensions

L1 28.12 in	D2 11.2 in
L2 19.29 in	M (Ref.) 10 in
D1 (MAX.) 12.94 in	Total Weight 494 lbs
NEMA Frame 284TC	

Company	Water Technology Group
Contact	Bret Bernarding
Phone No.	3035246930
Email	bbernarding@cogentcompanies.com

xylem
Let's Solve Water